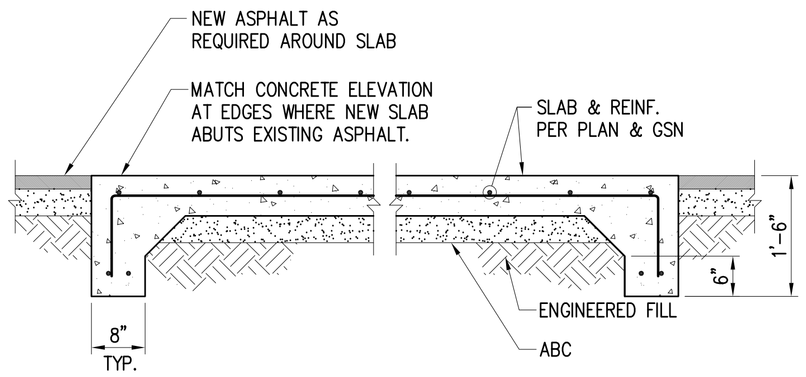

SLAB ON GRADE

SCALE: 3/4"=1'-0"

1 / CI101

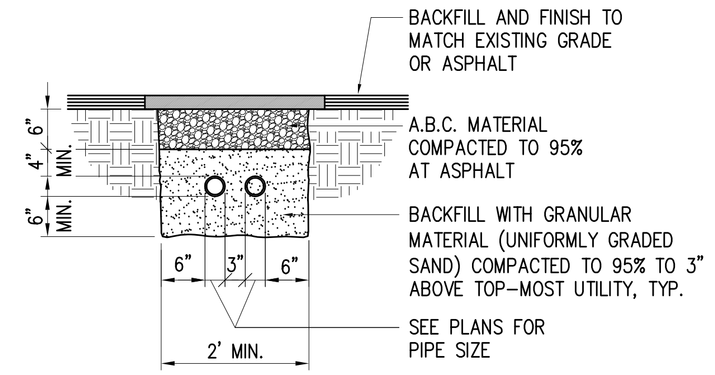

UTILITY TRENCH

SCALE: 3/4"=1'-0"

2 / CI101

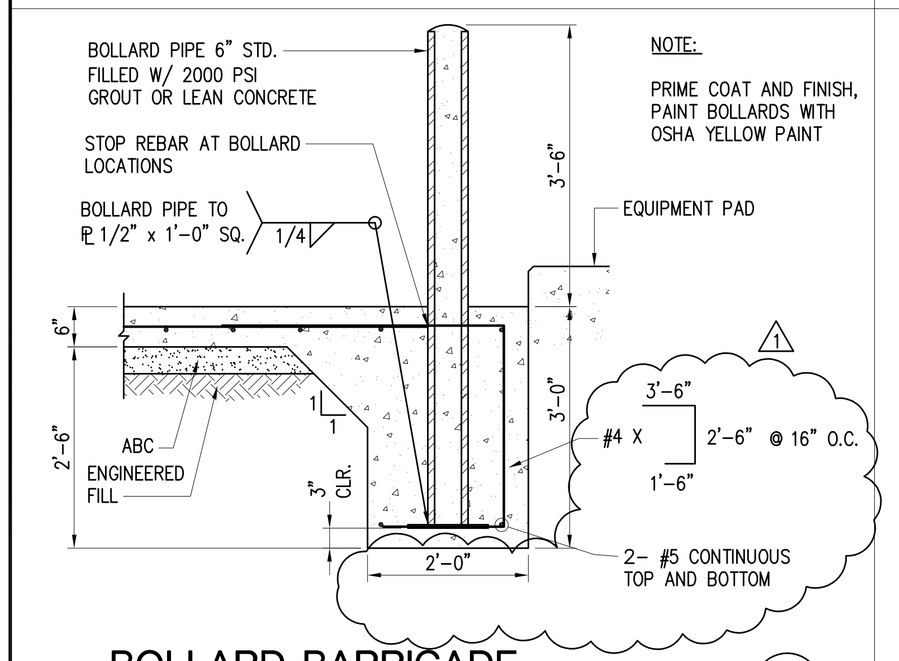

BOLLARD BARRICADE

SCALE: 3/4"=1'-0"

4 / CI101

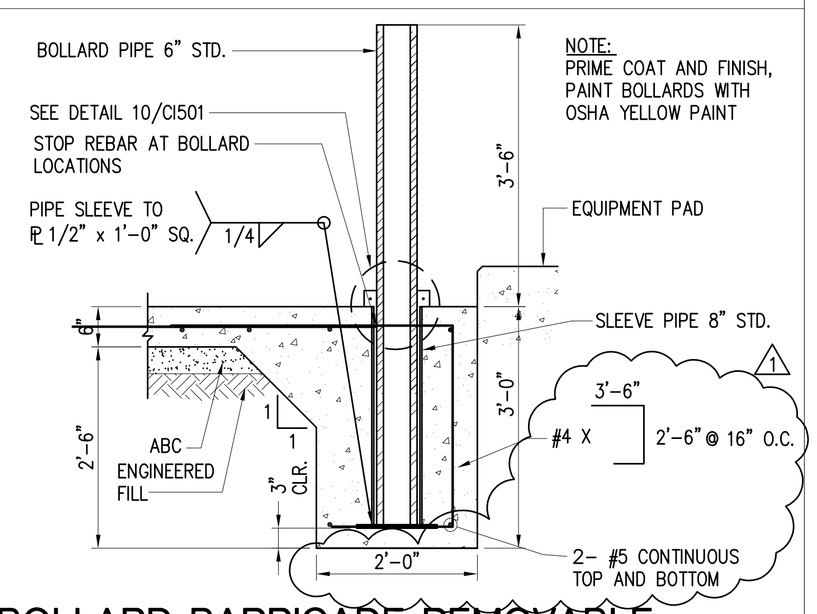

BOLLARD BARRICADE REMOVABLE-DETAIL 1

SCALE: 3/4"=1'-0"

5 / CI101

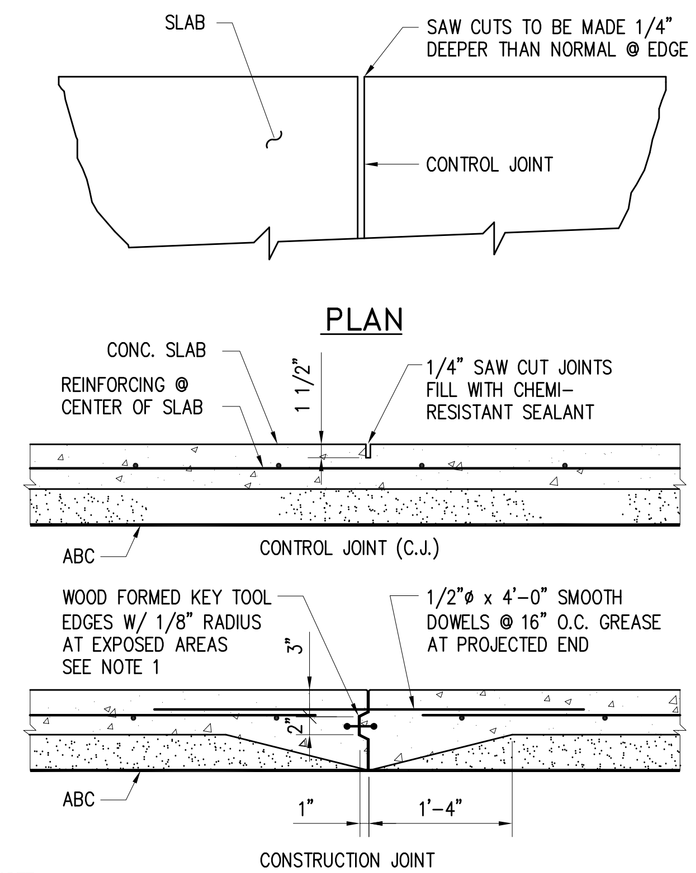

NOTE:
1. IF CONSTRUCTION JOINT IS REQUIRED, CONTRACTOR TO PROVIDE CHEMICAL WATERSTOP BOMETALS MODEL NO. TDB-4316 OR EQUIVALENT.

CONSTRUCTION/ CONTROL SLAB JOINT

SCALE: 1"=1'-0"

3 / CI101

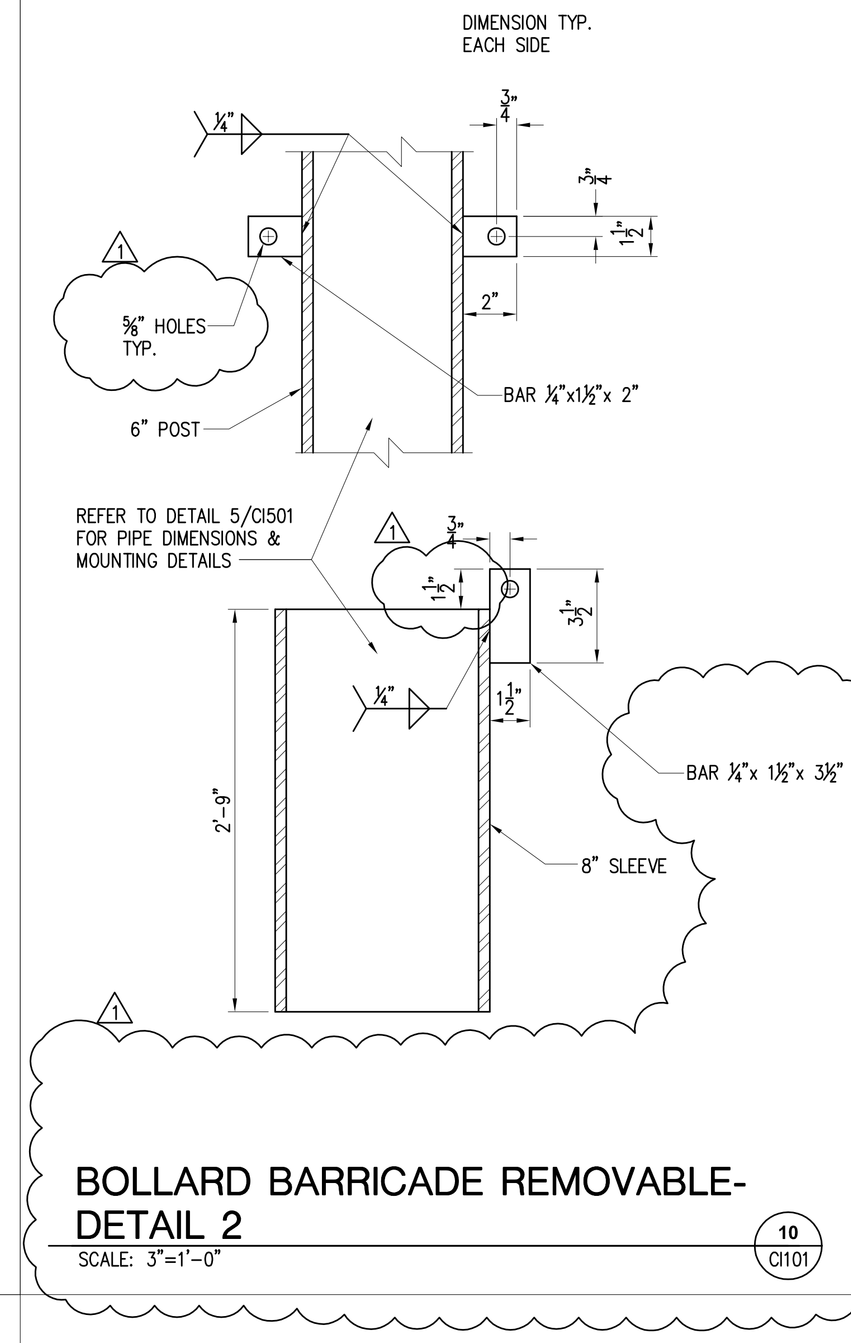

BOLLARD BARRICADE REMOVABLE-DETAIL 2

SCALE: 3"=1'-0"

10 / CI101

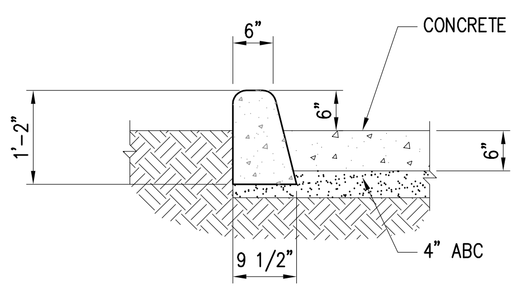

CONCRETE CURB

SCALE: 3/4"=1'-0"

7 / CI101

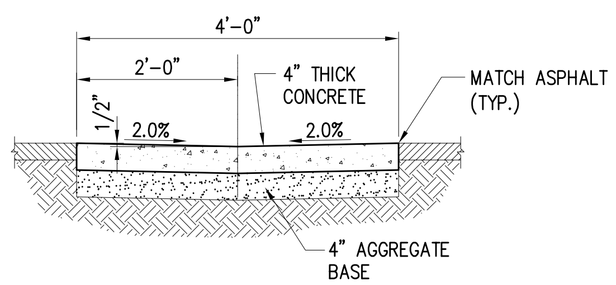

CONCRETE SWALE

SCALE: 3/4"=1'-0"

8 / CI101

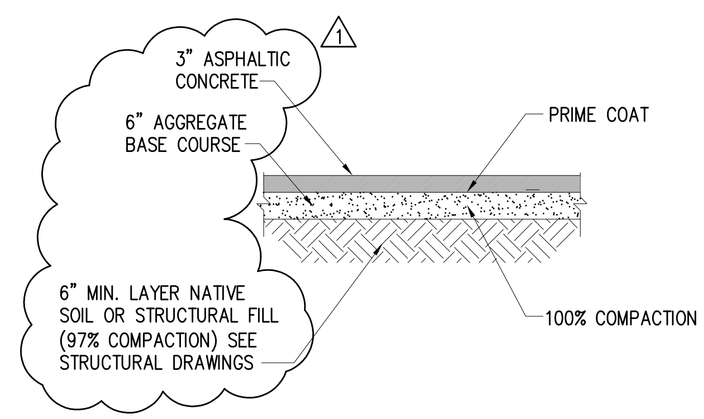

ASPHALT SECTION

SCALE: 3/4"=1'-0"

6 / CI101

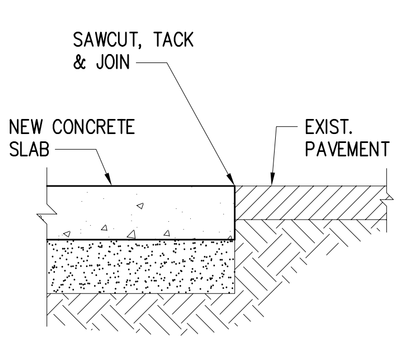

CONCRETE TO EXISTING

SCALE: 1 1/2"=1'-0"

9 / CI101

RICHEY BLVD. FUEL TANK REPLACEMENT

PIMA COUNTY
FACILITIES MANAGEMENT
150 WEST CONGRESS, 5TH FL.
TUCSON, AZ 85701

2051 W. SUNSET RD.
SUITE NO. 101
TUCSON, ARIZONA 85704
TEL: (520) 293-1488
FAX: (520) 293-8349
WWW.m3eng.com
ARCHITECTURE
ENGINEERING
CONSTRUCTION MANAGEMENT

Revisions

Description	Date
1 REVISIONS	3/15/11
2	
3	
4	
5	
6	

Drawn: DEJ
Checked: WB
Issue Date: 12-17-2010

Drawing Title
CIVIL
DETAILS

Sheet Number
CI501

M3PN 100100

Last Update: 7.1.2011

File: P:\2010\100100\Reference\Bind\100100 CI501.dwg LAST UPDATE:7/1/2011 11:08 AM BY: AN1761